# Explosive proof telephone KNEX1

— Global Industry Communications Leadership Brand —

## Features

1. IECEx certified
2. Type Ex e ib mb I IC T6 Gb.
3. Waterproof degree IP66
4. Analogue telephone matching with most PABX, PBX and PAXsystem
5. Telephone line powered. No external power or battery required
6. Robust SMC 2600 glassfibre reinforced polyester die-cast body
7. LCD display, SUS Metal keypad 24digit, Magnetic reedhook-switch
8. Busy tone detection for auto release the line if line busy
9. High temperature approval, Auto answer auto release line.
10. Full Soft lock: only dial out from phone book 50 memory address number
11. Half soft lock: limit to dial out starting number, e.g. “ 00852 ” area code
12. Ring sound 95 dB dfd in 1 m and 10 ringing tone melodiesselectable
13. Listening by loudspeaker: 70dB in 1m
14. Phone book memory: 50 address ( name & number) programmable

## LCD display include

Manual setting
Welcome text programmable e.g: welcome to koontech telephone
Full soft lock or half soft lock
Phone book up to 50 address number selectable
Ring speaker up to 4 level selectable
Hands free talking sound up to 4 level selectable
Handset receiver sound up to 4 level selectable
Up to 9 Ring tone melodies selectable
Back light up to 4 level selectable
The dialing number
Calling time counting

## Certificate:

KOONTECH.COM
Explosion-proof Telephone
Model: KNEx1
Ex e ib mb II C T6 Gb
Ex tb IIIC T80℃ Db -25℃≤Ta≤+60℃
CQM -93-2014-0127
IECEx CQM 15.0017X
Shenzhen xijun Technology Ltd
6/F 268# Nanchang i nd. park Gushu Baoan
Shenzhen China
2017 s/n 001

DC-48V

II 2GD

CE 0359

IP66

RoHS

IEC IECEx

## Specification

| | |
|---|---|
| Unit dimension | 227 x 293 x 135mm |
| Unit Weight | 5.8kg |
| LCD Display: | 2 line alphanumerical display ICON or number or letter<br>Up to 4 level back light selectable |
| Keypad | stainless steel flash mount Waterproof IP66. Ice protection<br>21 keys with number and ACE letter for program |
| Handset: | dynamic receiver with inductive coupling for hearing aids<br>Electret type microphone with noice cancelling<br>Stainless steel armoured handset hold over 170kg |
| Waterproof protection | IP66 |
| Impact protection: | IK09 |
| Call Flash transfer: | max:120ms |
| Dialling procedure: | DTMF |
| External function (Option): | external louder speaker<br>additional earpiece<br>headset<br>ringl sounder |
| operation temperature: | -25℃ to 60℃ |
| Storage temperature: | -30℃ to +70℃ |

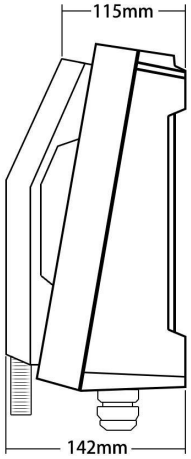


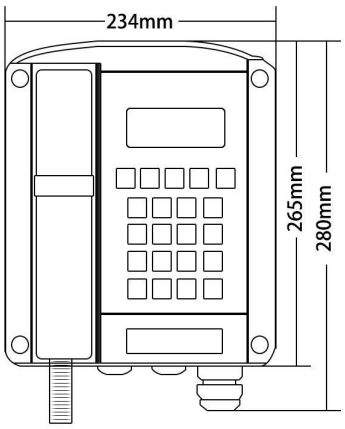

# TELEPHONE INSTALLATION SIZE

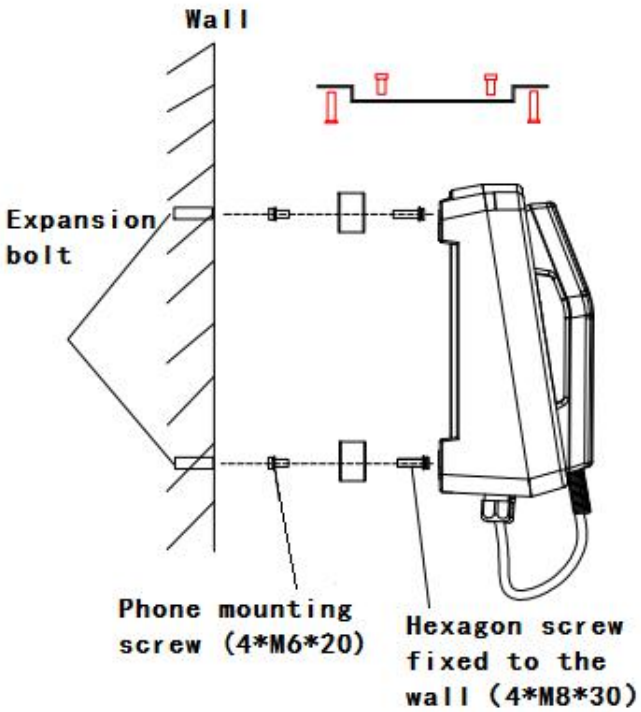


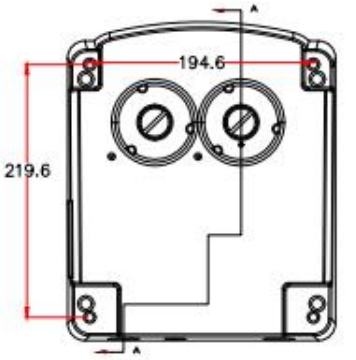


Bottom mounting hole

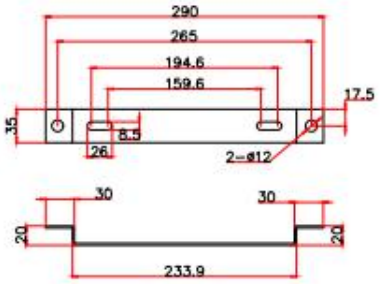


Mounting strip mounting hole bitmap