昆仑科技

www.koontech.com

香港昆仑科技（深圳）有限公司

Regular Customer

THALES SIEMENS Alcatel·Lucent HUAWEI ERICSSON TAKING YOU FORWARD AVAYA The Power of We

Weatherproof phone KNSP-09

1 2 3

The most professional manufacture in Asia
The exclusive supplier for all Metro project in China

The Weatherproof phone will be designed to work on Railway, metro, tunnel, etc. Housed in robust aluminium die case with spring loaded door, it will offer protection against the outdoor environment, vandals resistance and rot resistance.
The unit will meet all the latest European/UK standards for EMC and US FCC, telephony, waterproofing IP 66, and lightening protection together with offering the level of performance and reliability demanded in such an environment.

3 colors are available
Blue Yellow Red

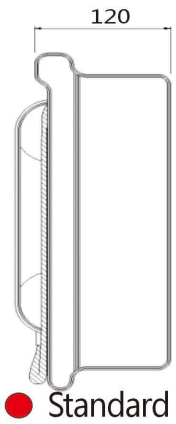

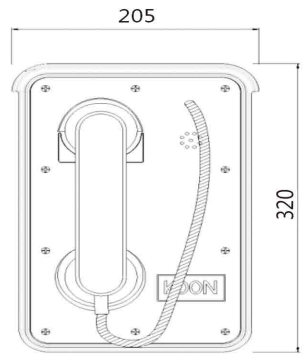

- Standard and SMART Analogue and VoIP-SIP options available
- DTMF(Dual Tone Multi Frequency)
- Matching with most PABX,PBX and PAX systems.

Main Product features

1. Robust aluminium alloy die-cast body.
2. Full keypad with memory, 10 button programmable speed-dial telephone, Illuminated button optional.
3. Weather resistant to IP66 standard, service temperature range from:-30℃ to +70℃
4. Magnetic reed hook-switch
5. Telephone line powered. No external power or battery back up required.
6. Lightening protection to ITU-T recommendation K.21
7. Handset: made of special engineering plastic, high anti-knock resistance, Weatherproof, armoured cable optional.
8. Hearing Aid compatible receiver, Noise canceling microphone.
9. Handset integrity wiring to enable the telephone system to check if the telephone unit is still operational.
10. Selectable 7 minute time out, to release the line if the handset is left off hook.
11. Vandal resistant and tamper-resistant hardware,
12. Easy installation/ replacement
13. Last number redial
14. Adjustable ringer and volume control.

Main PCB

1. Well treated PCB used inside the phone.
2. Robust screw terminals used for the connection of ringer, handset, line in, hookswitch.
3. Selectable 7 minute time out, to release the line if the handset is left off hook.
4. All connectors be greased in production.

Handset

1. Kirk electro dynamic transducer for both handset transmitter and receiver
2. Spring cable or armoured cable to attach the handset to the telephone main unit
3. Stainless steel cable to connect exchange.
4. Inductive coupler fitted for hearing aid compatibility.
5. Handset integrity wiring to enable exchange to check if the phone is still operational.

VOIC OVER IP- SIP （Version）

Connection type: RJ45 Socket inside sealed enclosure
Power supply: External 5V dc
Call set-up Protocol: Session Initiation Protocol(SIP)
Configuration: DHCP or STATIC IP address provisioning

KON 昆仑科技
HONGKONG KOON TECHNOLOGY LTD
Tel: 0086755 29790158 / 27448753 Fax:0086755 29790278 Email:koon03@vip.163.com www.koontech.com

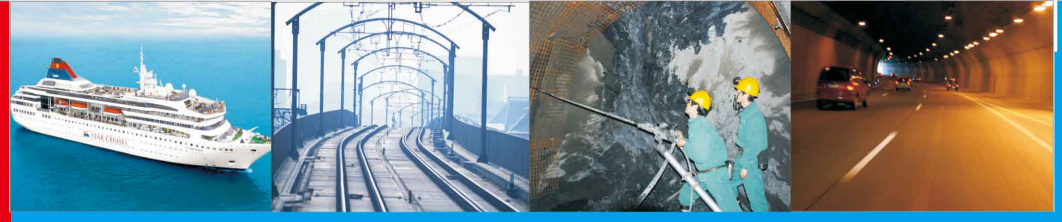

The most professional manufacture in Asia
The exclusive supplier for all Metro project in China

Telephone layout

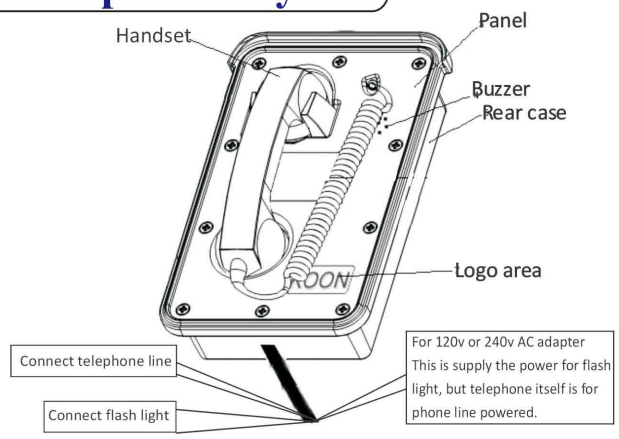

GSM version

GSM 2G/3G Solar Powered with built-in rechargeable battery

1. Network Interface: GSM Frequency: 850/900/1800 /1900MHZ, 2G, 3G,WCDMA,
2. Ringing: Through internal Speaker/ringer
3. Power Supply: Re-chargeable Battery powered: 9V/14Ah,
4. Solar back-up: 12V/30W
5. Time out: selectable 0-20 minutes
6. Built-in battery standby: 21 days, can improve to 42 days.
7. Built-in battery talking time: 56hours, can improve to 100 hours

TECHNICAL SPECIFICATION

1. Applicable for various types of SPC exchange and dispatching exchange system with feeding voltage of 33V-60V.
2. Ambient temperature:-30℃~70℃ Relative humidity:10%~95% Atmospheric pressure: 86~106Kpa Circumstance noise:≤ 60dB (A)
3. Sound level of ringing :70-85dB (A) .
4. Call transmission index : (7KM)SLR≤12,RLR≤-1, STMR≥10, output impedance is 600Ω.
5. Super strong function is available for dialing 12 groups of numbers stored in the memory (maximum length of each store number is16 digits)

Mounting bracket

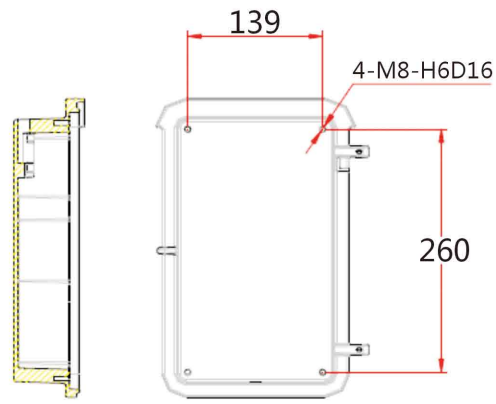

Connection cable

Stainless steel connection cable to exchange.
Well treated keep waterproof.

Packing detail:

Unit size: 320*205*120mm , N.W: 3.9KG
1pcs in each inner CTN box, size: 439 *277 *191mm G.W: 5.7KG
4pcs in outer CTN box, size: 566 * 445 *420mm G.W: 24.1KG
20GP: 1120PCS 40GP: 2240PCS 40HQ: 2640PCS

Certification:

IP66 RoHS 欧盟绿色认证

EMC: EN50121 (Railway application-ElectromagneticCompatibility)
EN55022: emissions
En55024: immunity
Ingress Protection: GB4208-93 IP 66
FCC
ITU-T Recommendations K21

KOON 昆仑科技
HONGKONG KOON TECHNOLOGY LTD
Tel: 0086755 29790158 / 27448753 Fax:0086755 29790278 **Email:koon03@vip.163.com** **www.koontech.com**